Practical Modeling of Bucket Brigade Device Circuits

Colin Raffel and Julius Smith
Center for Computer Research in Music and Acoustics
Stanford University

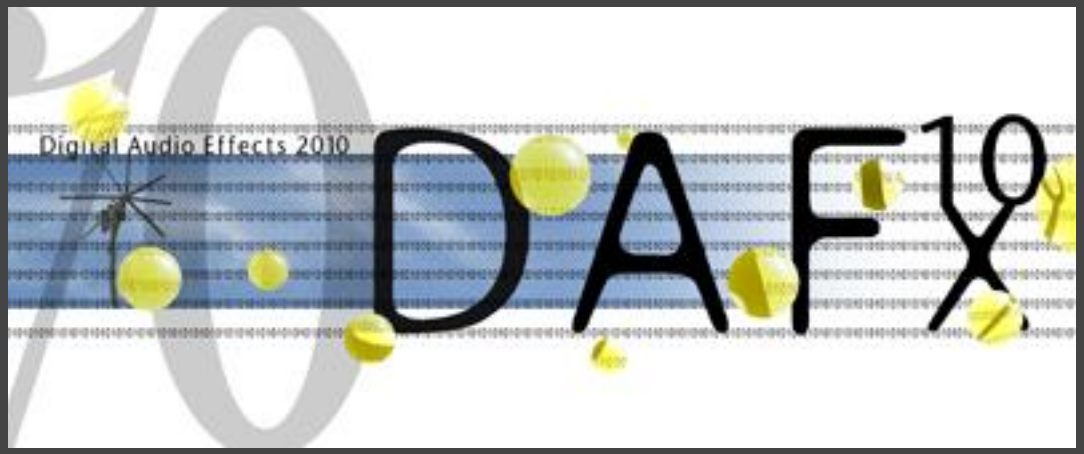

Contents

- History and Topology
- Anti-aliasing and reconstruction filters
- Compression and expansion
- Bucket brigade device effects
- Modeling

Topology

- Developed late 60s, early 70s, replaced by digital delays when they became cheaper
- Sampled signal passed through capacitors at clock rate (bucket brigade analogy)

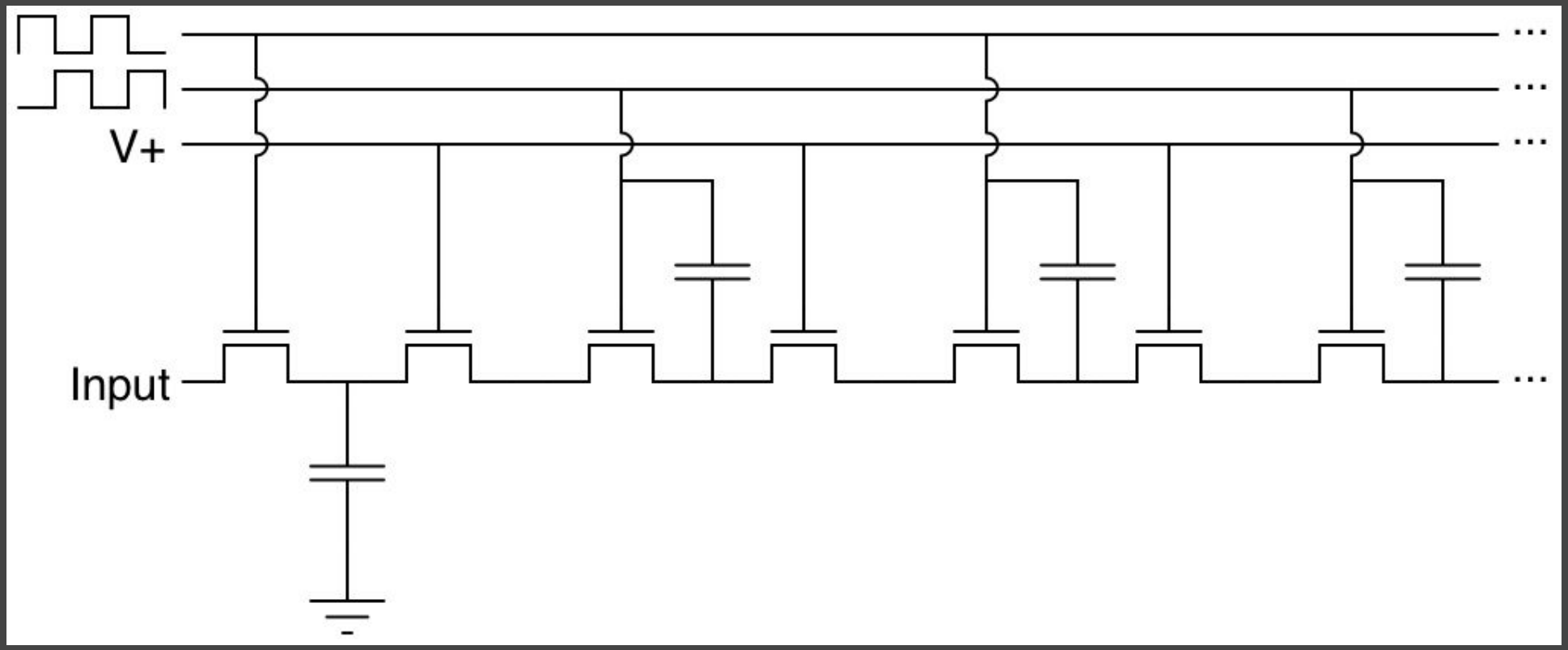

Circuit Examples

- Typical components
  - BBD Delay line
  - Variable clock frequency
  - Anti-aliasing and reconstruction filters
- Echo circuits
  - Compression, expansion
  - Feedback (repeating echo)

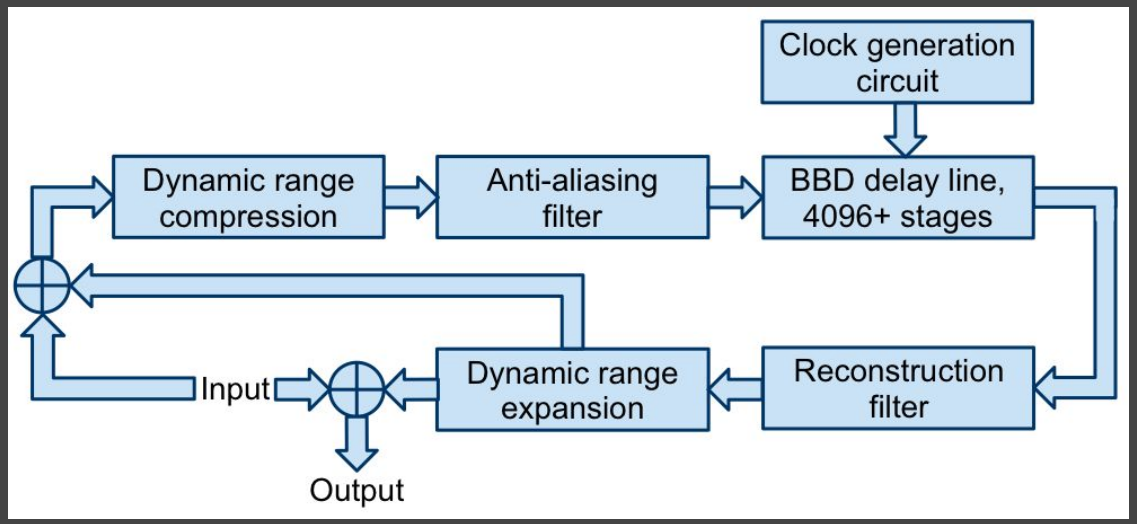

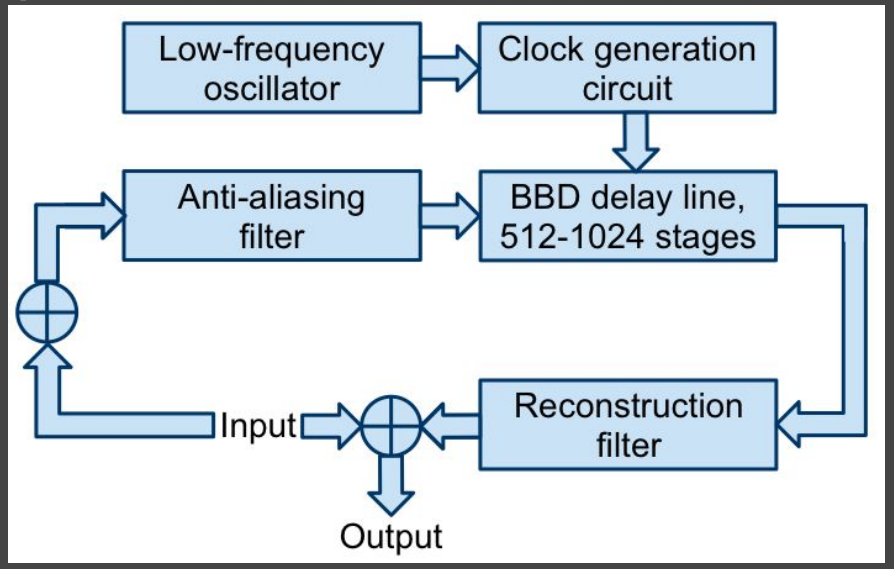

Filtering Requirements

$$\text{Delay Time (s)} = \frac{N}{2f_{cp}}$$

- Echo Circuits
  - Common implementation: 300 ms delay time with 4096 stages
  - ~7 kHz clock frequency
  - Sometimes as low as ~4 kHz!
- Chorus Circuits
  - 10 ms delay with 1024 stages
  - 51.2 kHz clock frequency
  - Sometimes lower
- Anti-aliasing and reconstruction filters needed

Filter Implementation

- Sallen-Key lowpass filters
  - Transistor-based common
  - Op-amp-based less common

$$\frac{V_{out}(s)}{V_{in}(s)} = \frac{\frac{1}{R^2 C_1 C_2}}{s^2 + \frac{2s}{RC1} + \frac{1}{R^2 C_1 C_2}}$$

- Cutoff frequency typically chosen to be 1/3 to 1/2 of the BBD clock
- In echo circuits, third-order anti-aliasing, and series third- and second-order reconstruction
- In chorus, flanger, and vibrato, typically lower total order

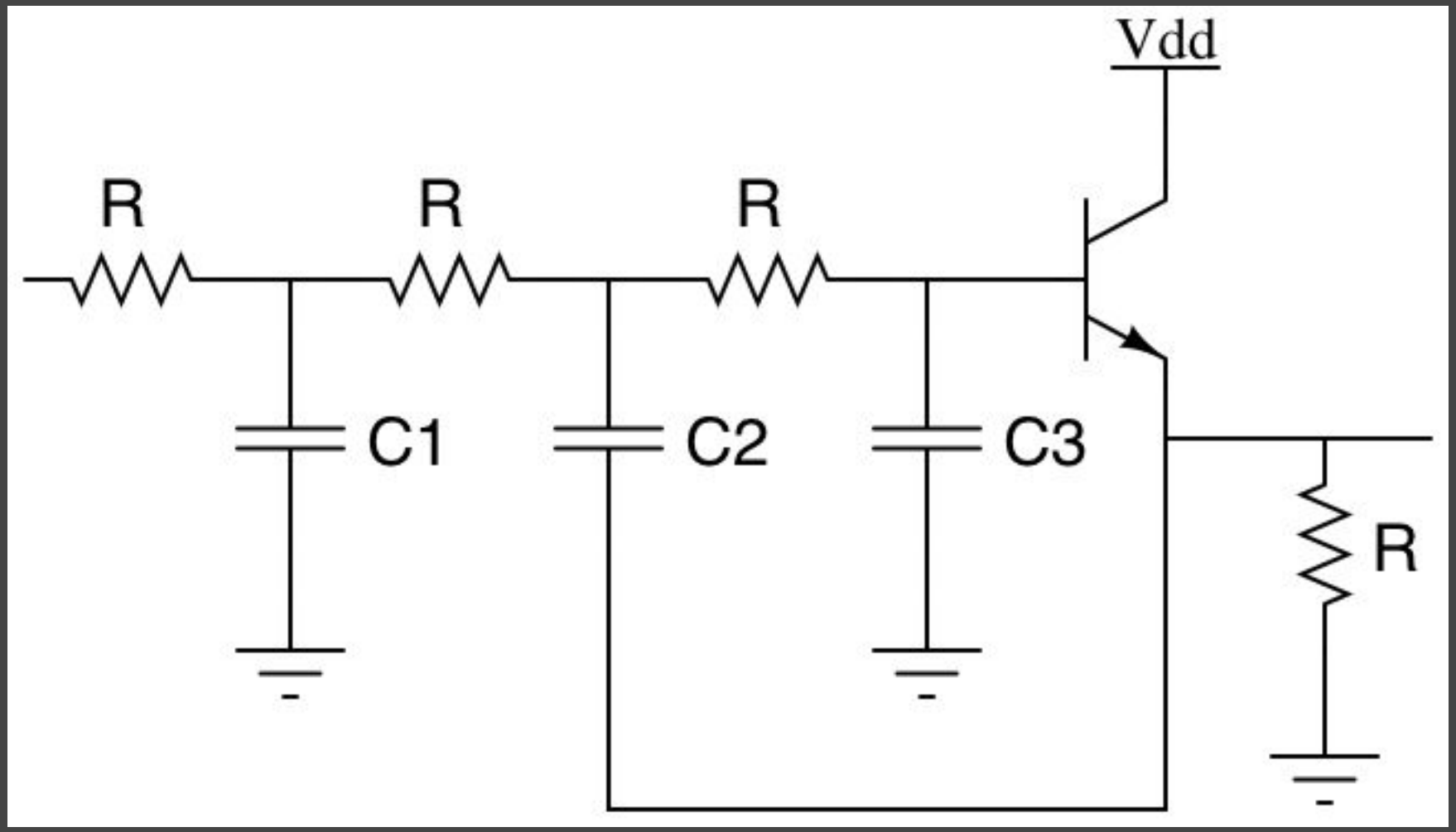

Third-order, transistor-based Sallen-Key low-pass filter

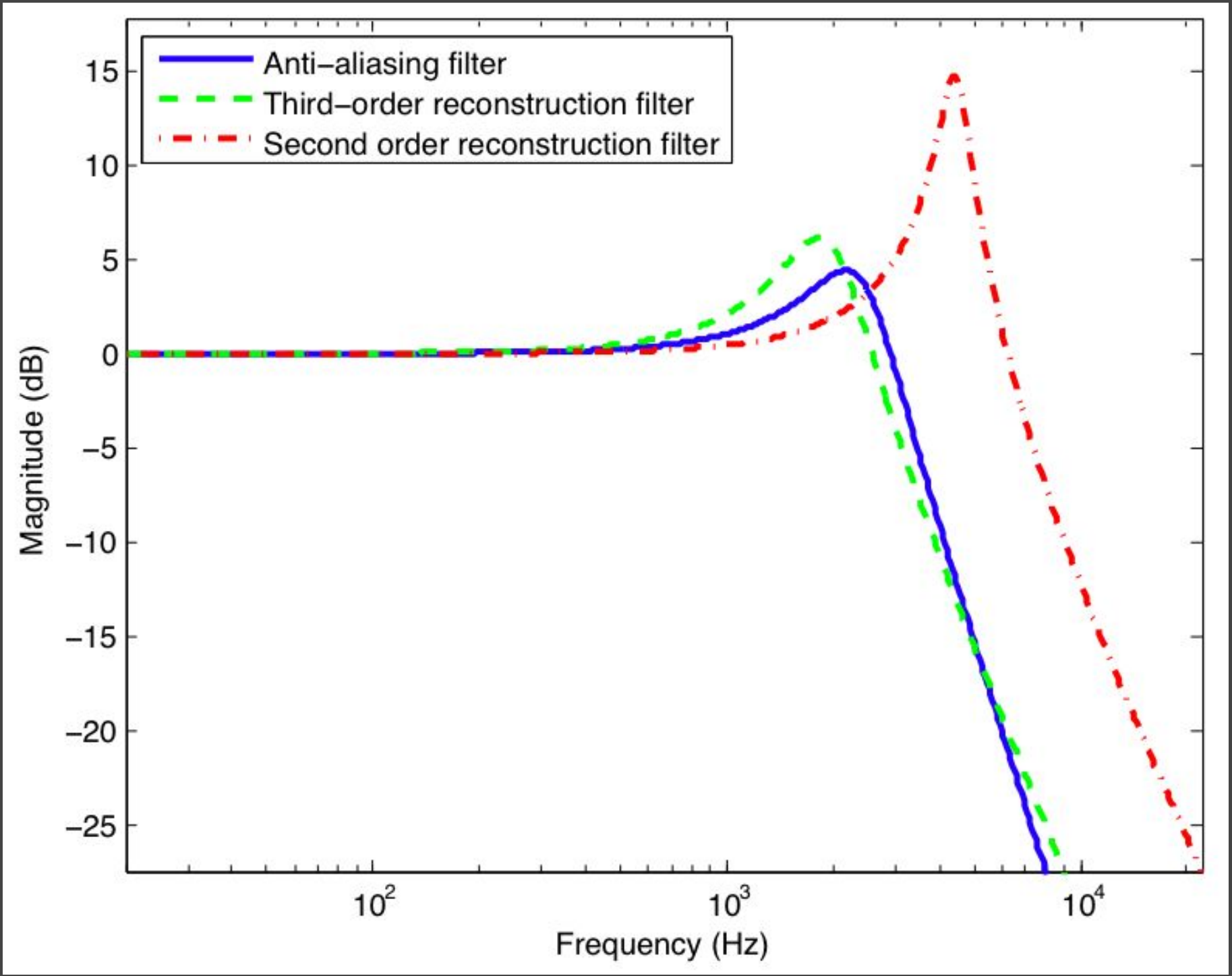

Typical magnitude responses of anti-aliasing filter and reconstruction filters

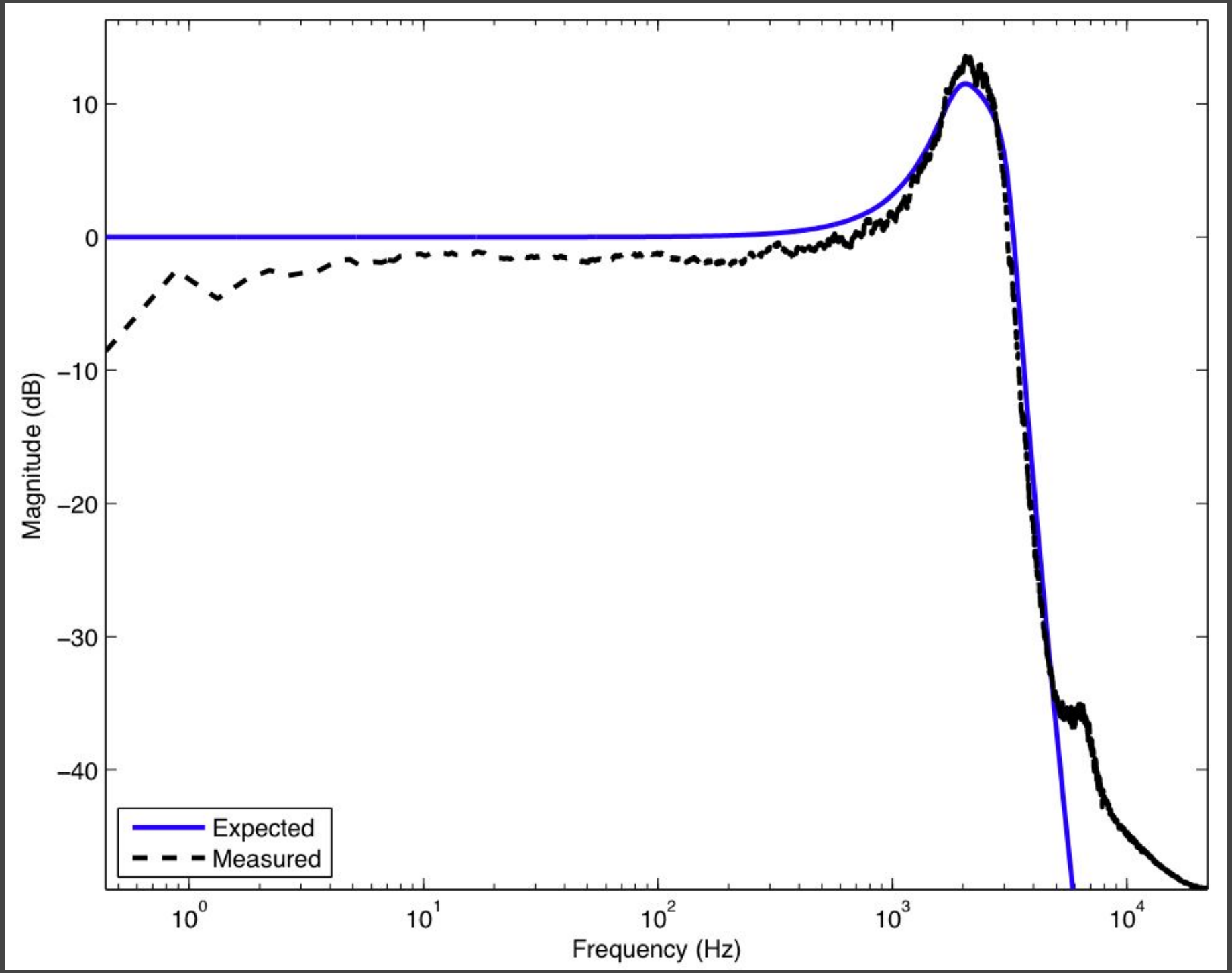

Measured and calculated combined magnitude response

Modeling BBD Filters

- First, obtain a frequency response based on circuit values and Sallen-Key filter transfer functions (or direct measurements)
- Then, digitize using any of a number of filter design methods (for example, `invfreqz`)
- For IIR filters, highly accurate results are possible at relatively low-orders
  - Third order ~5-7
  - Second order ~2
  - Total ~9
- Filter representation is often the most perceptually relevant part of the model

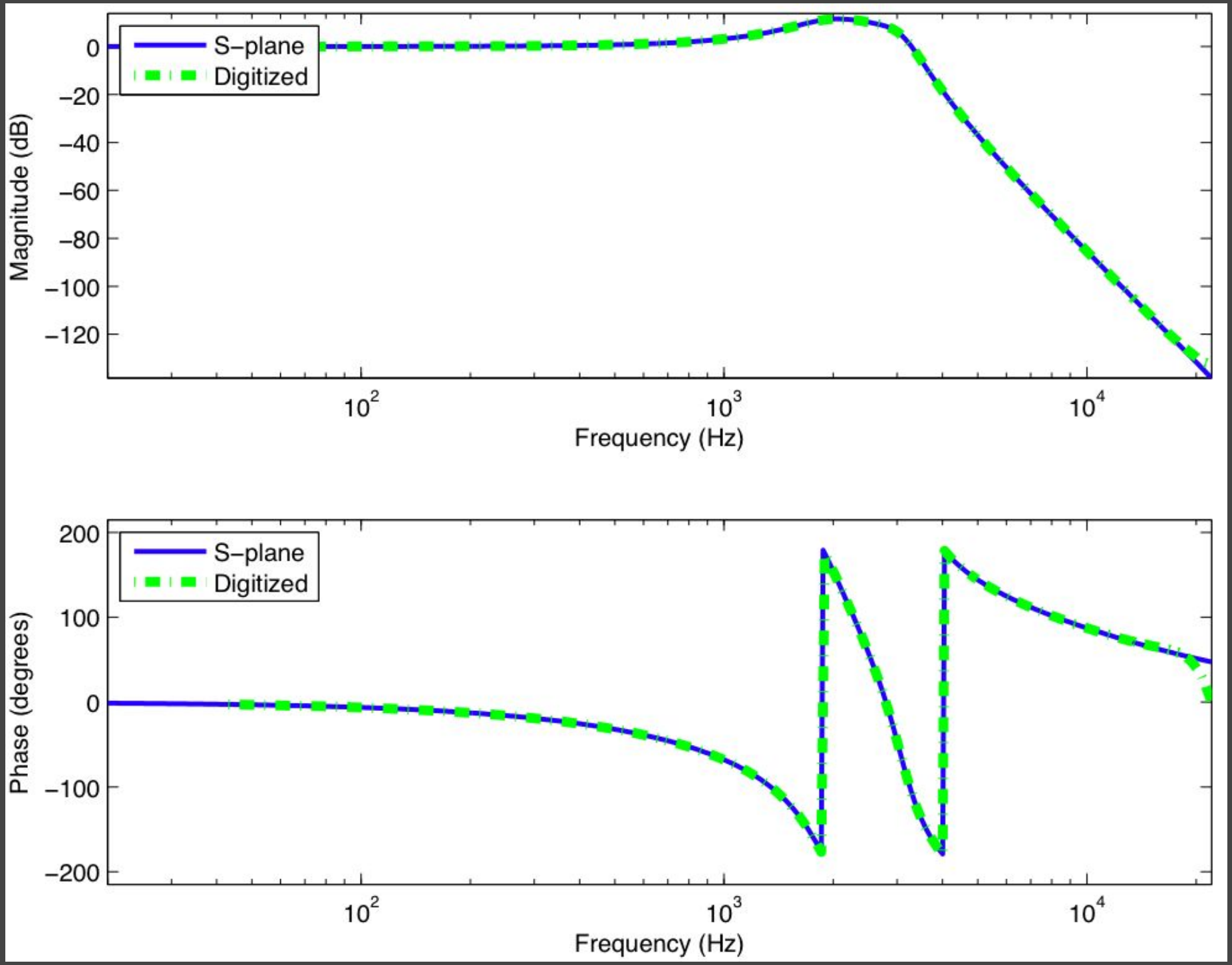

Digitized combined filter response, ninth-order

Companding

- BBDs have a low dynamic range
  - ~60 dB SNR common
  - THD increases dramatically when amplitude is over about 10% of the supply voltage
  - Effects are worse as the number of stages increases
- Companding
  - Compression preceding the BBD
  - Expansion following the BBD
  - Results in a low dynamic range in the BBD "channel"
  - Normally only found in echo circuits

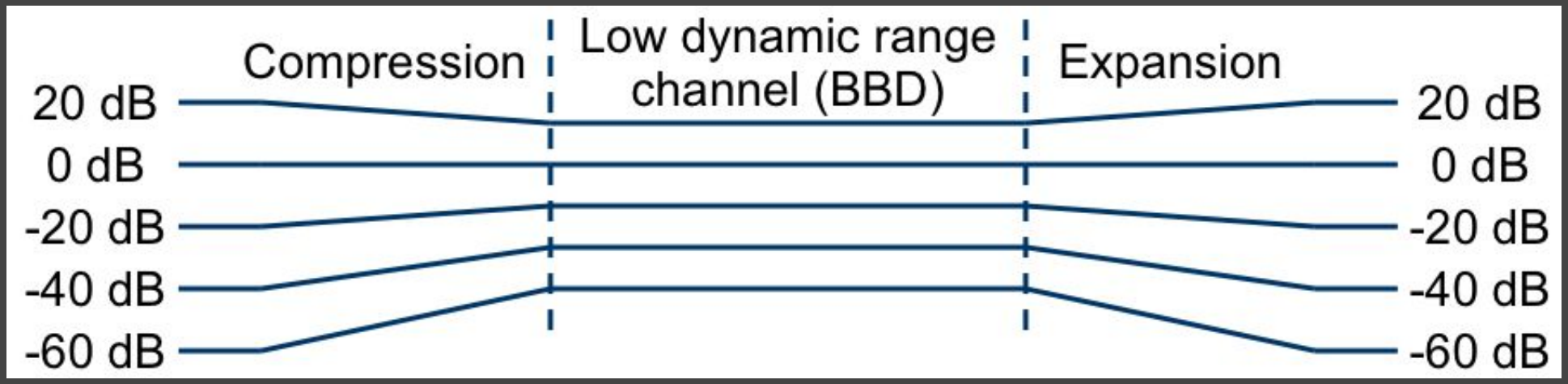

Effect of companding on the dynamic range of a signal

570- and 571-series

- The majority of BBD systems which include a compander use the 570- or 571-series compander
- Pair of variable gain amplifiers and level detectors
- Gain is internally set to have a compression or expansion ratio of 2
- Level detector controlled by external capacitor
  - Internally, the signal is rectified and sent through a RC filter
  - Resistor is internally set to 10kOhm
  - Capacitor value chosen to minimize ripple

Modeling BBD Compansion

- Use the average signal level to determine the gain of the system
  - Expander (feedforward)

$$f(x) = \text{avg}(|x|)x$$

  - Compressor (feedback)

$$f(x) = \frac{x}{\text{avg}(|f(x)|)}$$

- Averaging circuitry can be modeled by a one-pole digital filter
  - Input should be rectified
  - Model easily calculated based on external capacitor value

$$y(n) = x(n)\frac{T}{RC+T} + y(n-1)\frac{RC}{RC+T}$$

BBD Aliasing

- Discrete-time sampling produces large amounts of aliasing distortion
- This effect is ideally (and mostly) removed by anti-aliasing and reconstruction filters
- Modeling approaches
  - Can be ignored, but an interpolating delay line should be used
  - Downsampling/upsampling more realistic
  - Delay line of fixed length with "virtual" BBD clock source is most accurate and gives pitch shifting when changing the delay time for free, also requires interpolation

BBD Noise

- BBDs introduce noise, SNR typically ~60 dB
- Result of imperfect transactions between BBD stages
- Varies slightly with number of stages and clock frequency
- Can be reduced, but not removed, by compansion
- Inclusion in the model depends on application
  - Can be omitted for an intentionally clean digital system
  - Must be included to realize the "self-oscillation" effect common to BBD-based echos

Nonlinearities

- THD typically rated and measured to be about 1% per 1024 BBD stages
  - Hardly apparent for choruses, vibratos, and flangers
  - More apparent in echos, where the signal is recirculated
- Minimized by biasing input signal
- Does not vary dramatically with signal level (separate from BBD clipping)
- Aliasing distortion makes measurement difficult

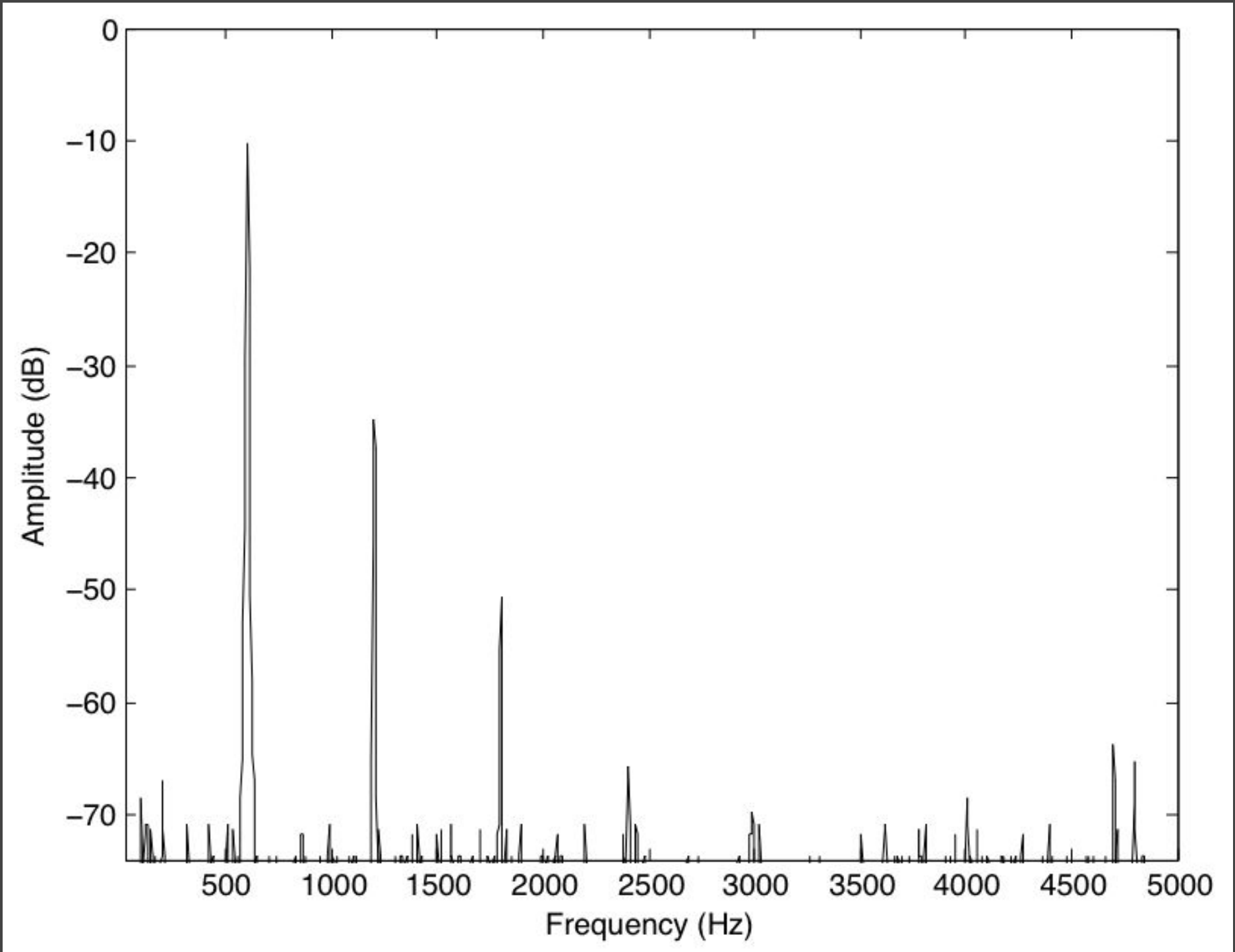

Measured magnitude spectrum for pure sine tone input

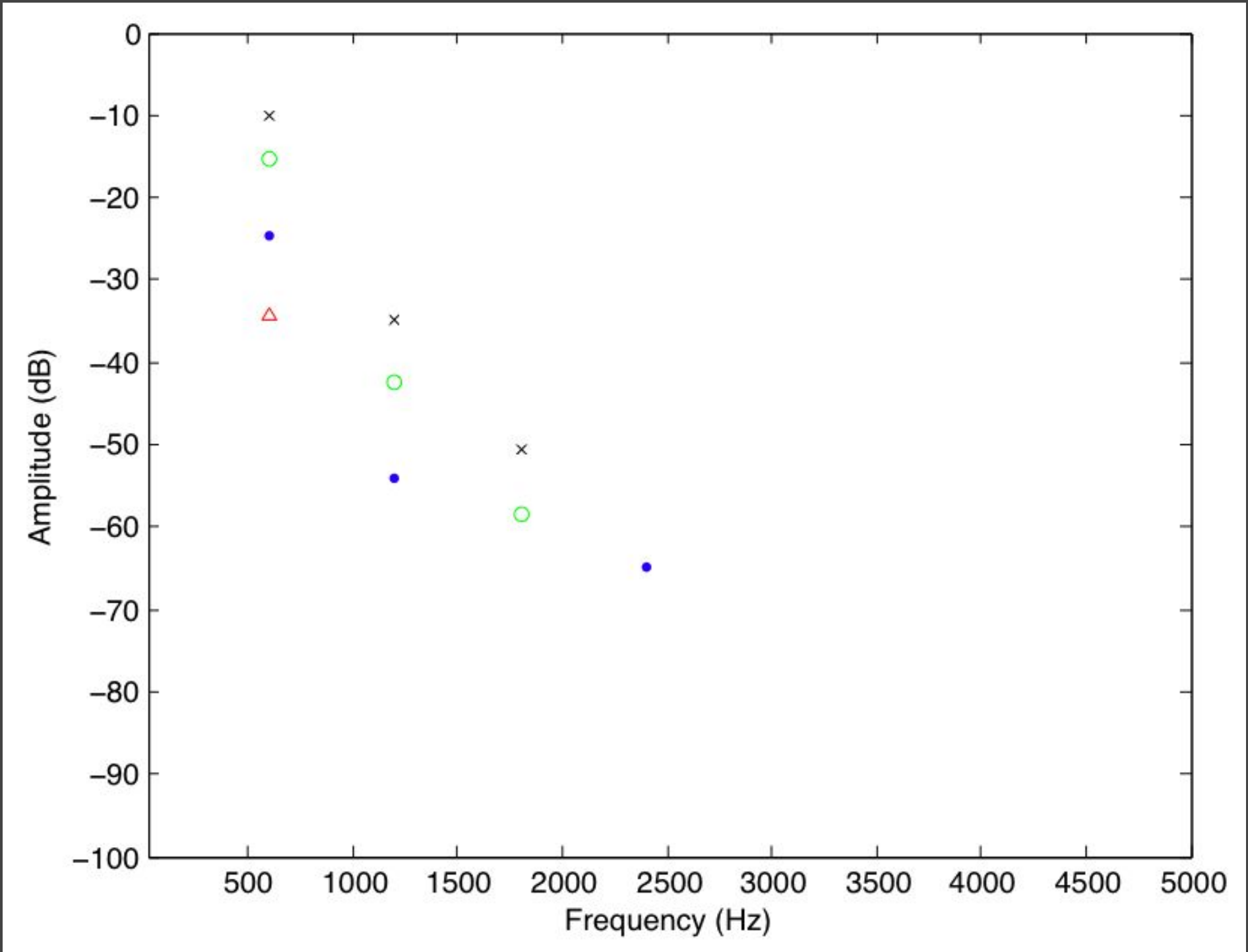

Peaks in magnitude spectrum for pure sine wave inputs at various levels

Nonlinearity Modeling

- Modeling is difficult because it is not a "clipping" nonlinearity
- Polynomial nonlinearity provides a good estimate

$$f(x) = \begin{cases} 1 - a - b & \text{for } x > 1 \\ x - ax^2 - bx^3 + a & \text{for } -1 < x < 1 \\ -1 - a + b & \text{for } x < -1 \end{cases}$$

- Parameters can be chosen to match one particular sine wave input level
- A more accurate implementation could vary parameters based on the average signal level
- Anti-aliasing filter in BBD system conveniently reduces digital nonlinearity aliasing problems

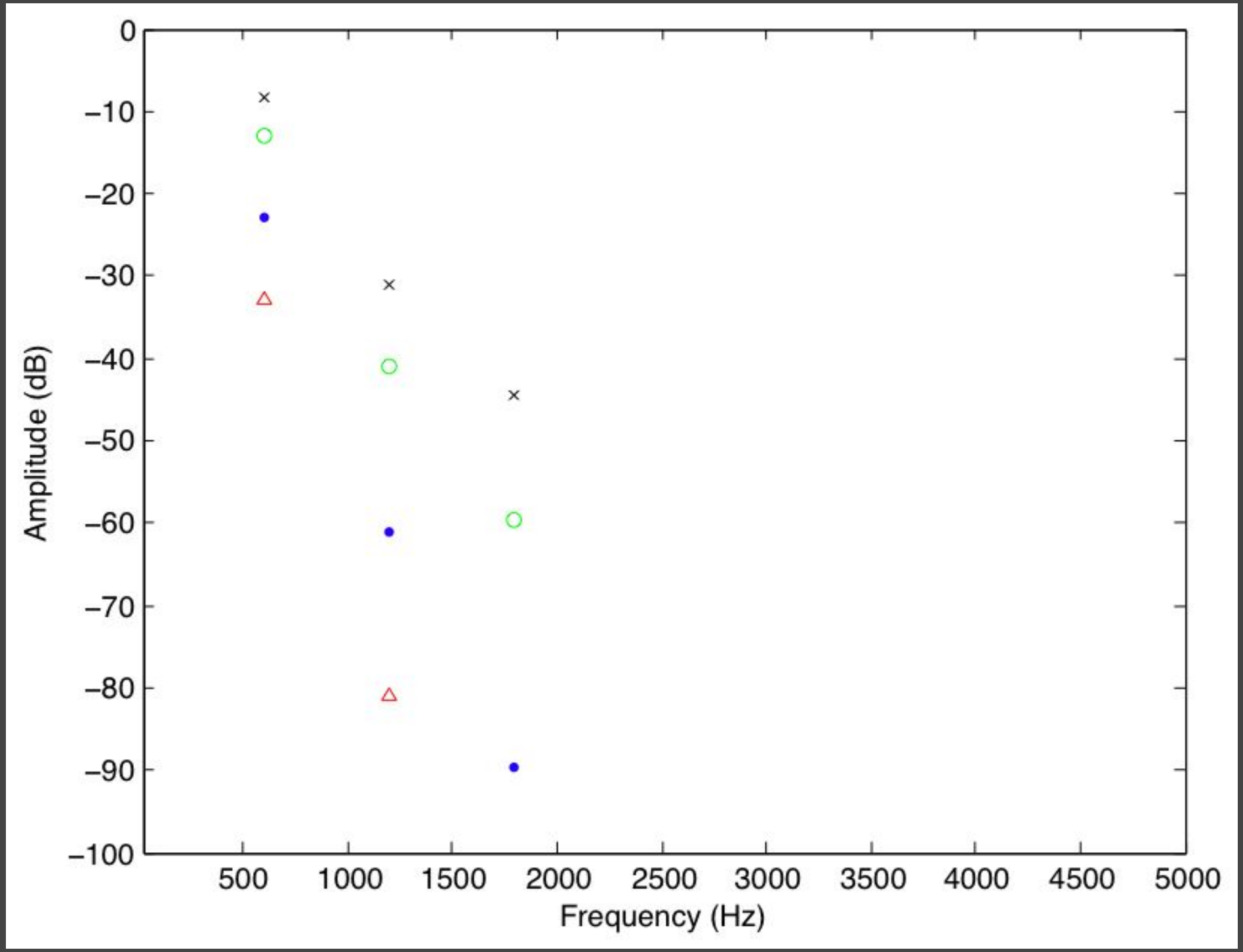

Harmonic distortion resulting from nonlinearity model

Model Example

- Models a 4096-stage BBD echo circuit
- Includes compansion, filtering, "virtual clock", noise, and nonlinearities
- Practical difficulties
  - Feedback compressor creates a delay-free loop
  - Compander estimate not exact
  - Component values also vary filter response

Acknowledgements

- Adam Sheppard and Travis Skare for lending BBD-based circuits to measure
- David Yeh for help identifying filter topologies
- Jonathan Abel for suggestions on where to look for BBD imperfections
- Julius Smith for practical advice and giving me the opportunity to study this!