JH. Triple Chorus
(c) 2007 J. Haible
All Rights Reserved
Errors Expected
Subject to Change without Notice
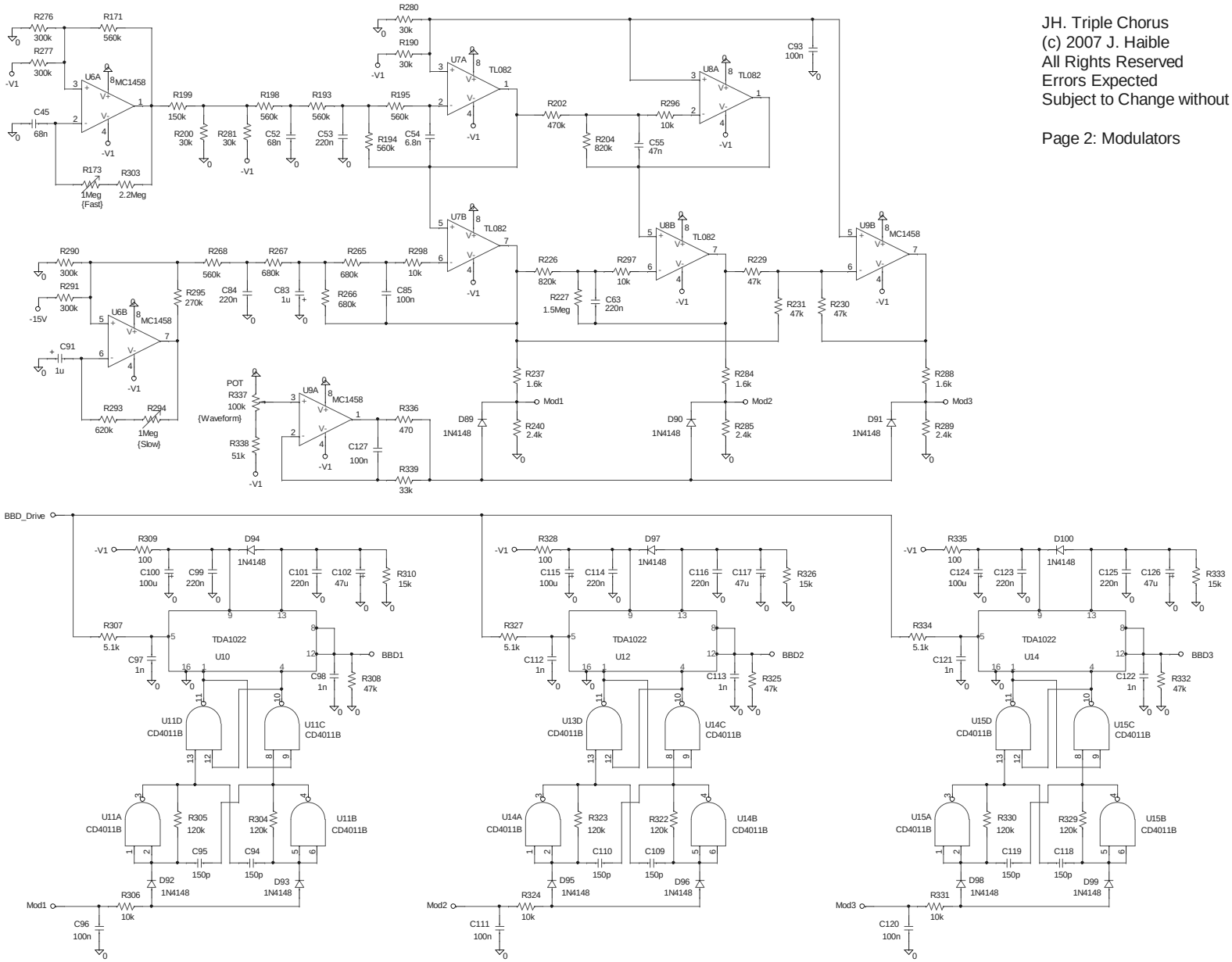
Page 2: Modulators